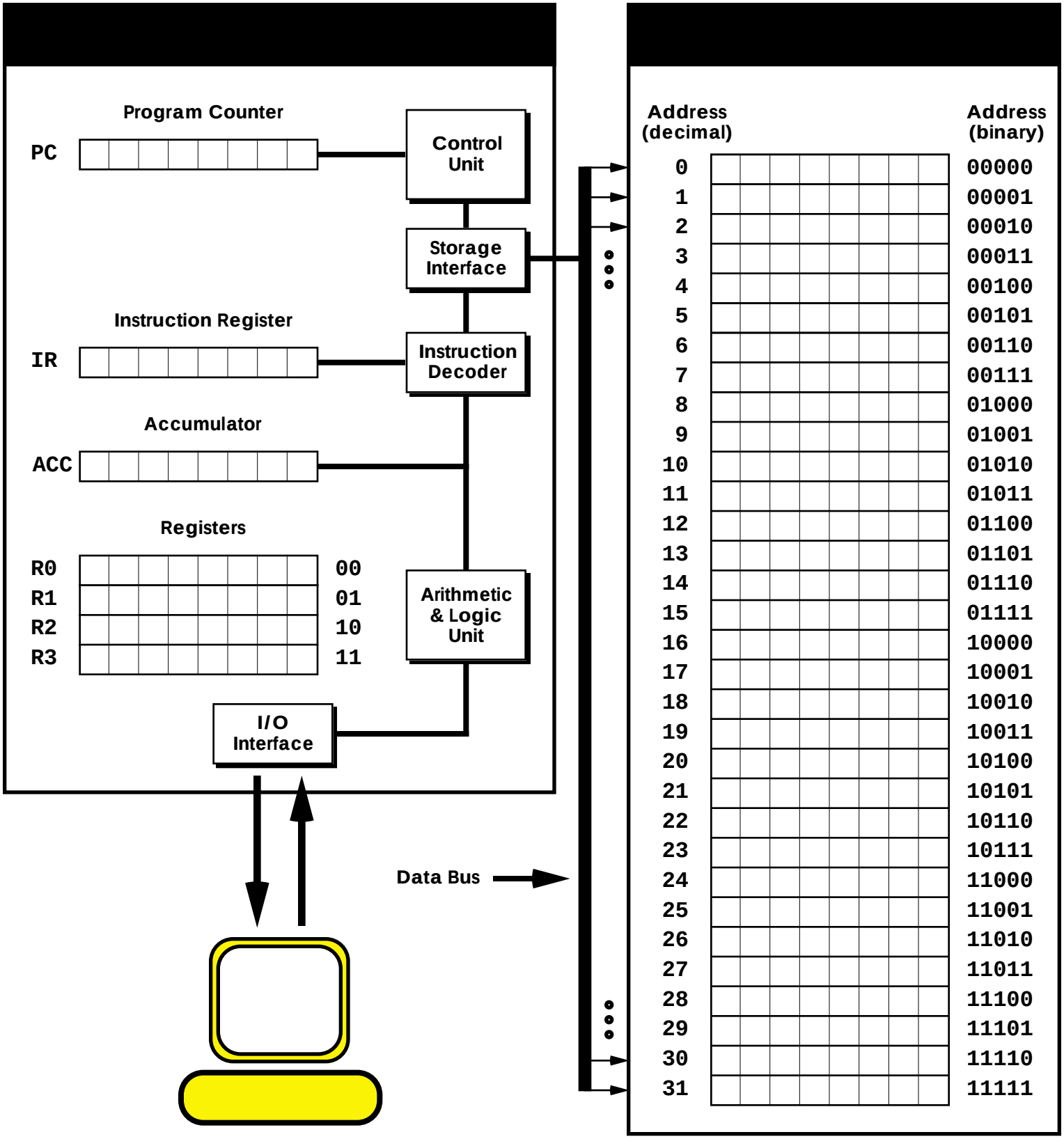The PC101 Machine Architecture